NO	DESCRIPTION	MATERIAL	Q'TY	FINISH	REMARK
1	BODY 1	BRASS	1	NICKEL	B-N0518-N
2	INSULATION	TEFLON	1	TEFLON	I-0096T
3	BODY 2	BRASS	1	NICKEL	B-N0320-N
4	PIN	BRASS	1	GOLD	P-N0013-G
5	RING	BRASS	1	NICKEL	R-0007-N

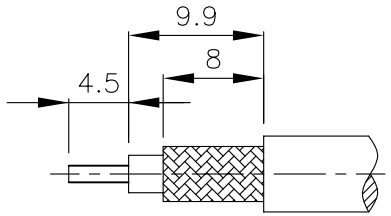

(Recommended Stripping Dimmension)

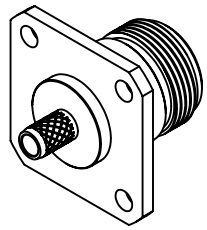

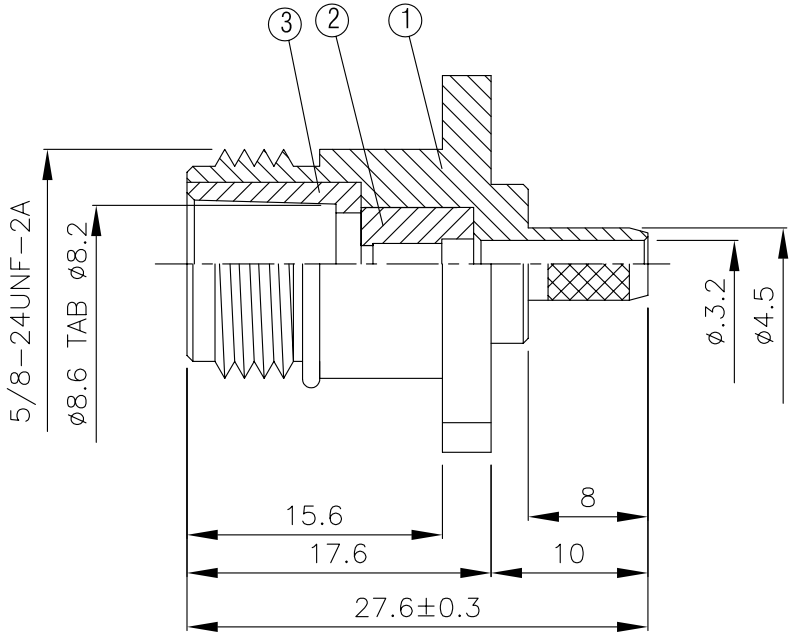

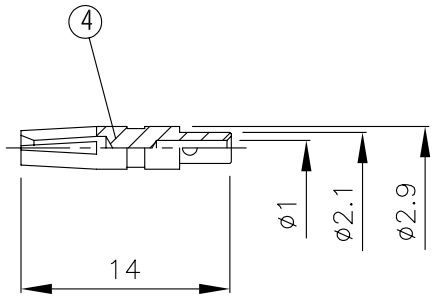

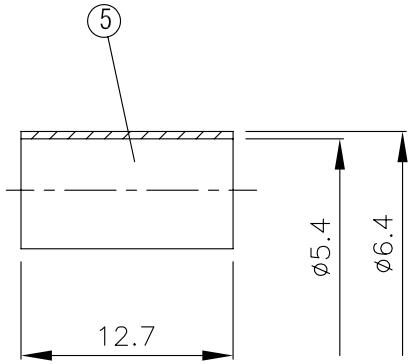

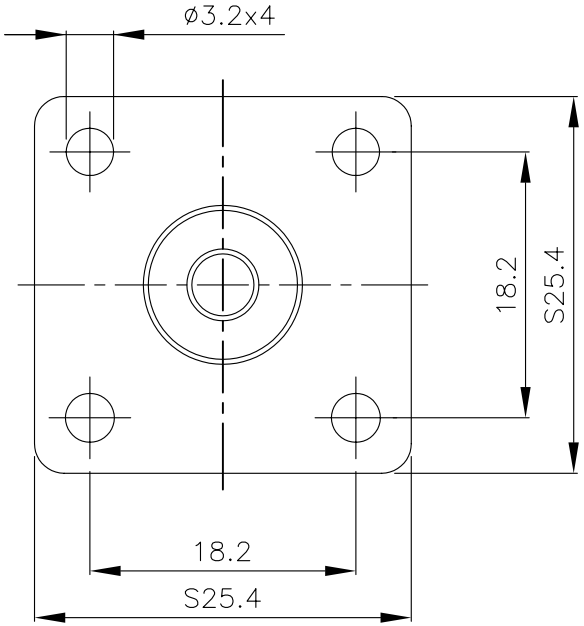

HUS-TSAN GROUP CO., LTD. P.O.BOX 40-76.TAINAN.TAIWAN,R.O.C.	DRAWN MARY	DATE 96.06.11	DIMENSIONS ARE IN MILLMETERS	REVISION	
	CHECKED 黃巧君	DATE	UNLESS OTHERWISE SPECIFIED TOLERANCE	DESCRIPTION	ENGINEER
TITLE N FEMALE CRIMP FOR RG 58/U,141 A/U	Q.A. 蘇姿潔	DATE	0.5-5=±0.2 120-315=±1		
PART NO. N-06F-TGN	APPROVAL 徐燦霖	DATE	5-30= ±0.4 315-1000=±1.6		
DRAWING NO. N 06F TGN	REVISION	DATE	30-120±0.6 1000-2000=±2.4		
			SCALE 4:1 SIZE A		