NO	DESCRIPTION	MATERIAL	Q'TY	FINISH	REMARK
1	BODY 1	BRASS	1	NICKEL	B-TNC0609-N
2	INSULATION	TEFLON	1	TEFLON	I-0284T
3	PIN	BRASS	1	GOLD	P-BNC0400-G
4	INSULATION	TEFLON	1	TEFLON	I-0283T
5	WASHER 3	PH.BRONZE	1	NICKLE	W-0014
6	BODY 2	BRASS	1	NICKEL	B-N0033-N
7	GASKET	SI RUBBER	1	RUBBER	RU-0007
8	BODY 3	BRASS	1	NICKEL	B-N0032-N
9	BODY 4	BRASS	1	NICKEL	B-N0606-N

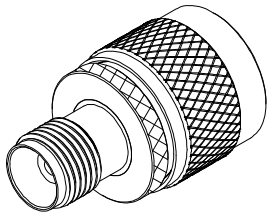

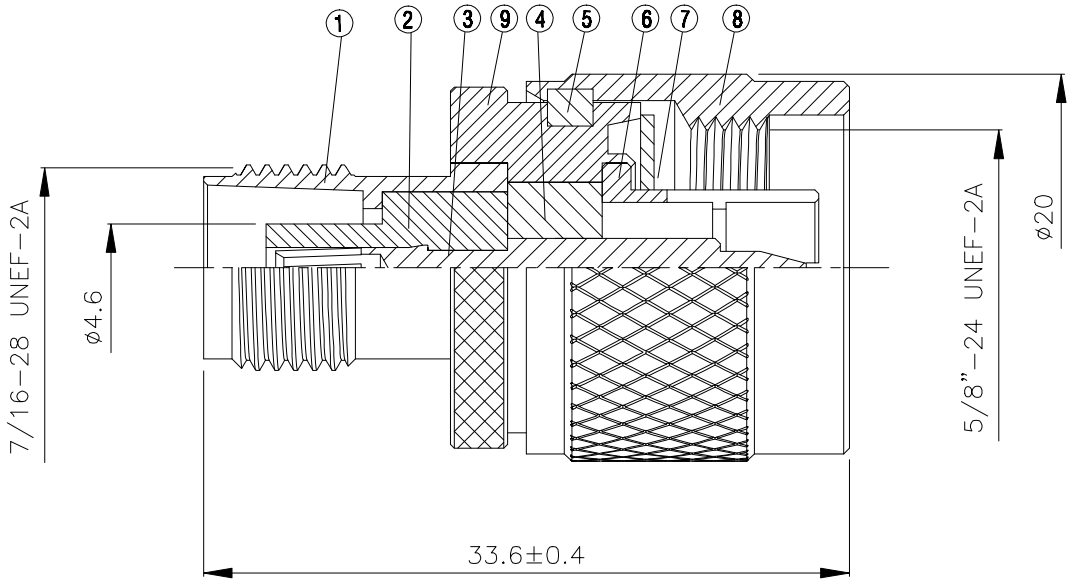

HUS-TSAN GROUP CO., LTD. P.O.BOX 40-76.TAINAN.TAIWAN,R.O.C.	DRAWN MARY	DATE 96.06.04	DIMENSIONS ARE IN MILLMETERS		REVISION
	CHECKED 黃巧君	DATE 96.06.04	UNLESS OTHERWISE SPECIFIED TOLERANCE		DESCRIPTION / ENGINEER
TITLE N MALE - TNC FEMALE ADAPTOR	Q.A. 蘇姿潔	DATE	0.5-5=±0.2 / 120-315=±1		
PART NO. N-14-TGN	APPROVAL 徐燦霖	DATE	5-30= ±0.4 / 315-1000=±1.6		
DRAWING NO. N 14 TGN	REVISION	DATE	30-120=±0.6 / 1000-2000=±2.4		
			SCALE 4:1	SIZE A	