NO	DESCRIPTION	MATERIAL	Q'TY	FINISH	REMARK
1	BODY	BRASS	1	GOLD	B-SMA0064-G
2	INSULATION	TEFLON	1	TEFLON	I-0547T
3	PIN	Be Cu	1	GOLD	P-SMA0037-G

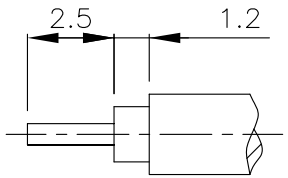

(Recommended Stripping Dimension)

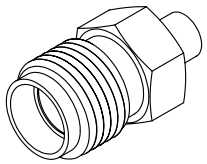

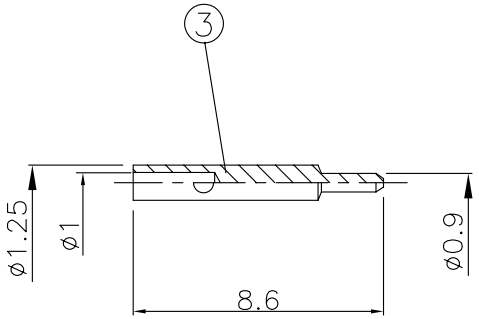

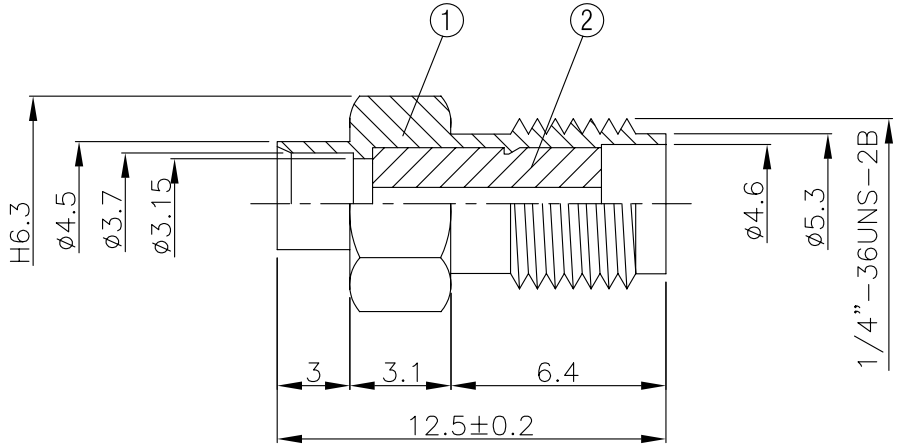

HUS-TSAN GROUP CO. ,LTD.	DRAWN MARY	DATE 90.10.25	DIMENSIONS ARE IN MILLMETERS		REVISION
P.O. BOX 40-76.TAINAN TAIWAN,R.O.C.	CHECKED 蘇姿潔	DATE	UNLESS OTHERWISE SPECIFIED TOLERANCES		DESCRIPTION / ENGINEER
TITLE SMA FEMALE SOLDER FOR RG 402 (.141) REVERSE POLARITY	Q.A. 馮健華	DATE	0.5-5=±0.2 120-315=±1		
PART NO. SMA-04V2-TGG-RP	APPROVAL 徐燦霖	DATE	5-30=±0.4 315-1000=±1.6		
DRAWING NO. SMA 04V2 TGG RP	REVISION	DATE	30-120=±0.6 1000-2000=±2.4		
			SCALE 4:1	SIZE A	