NO	DESCRIPTION	MATERIAL	Q'TY	FINISH	REMARK
1	SHELL	BRASS	1	NICKEL	B-SMA0043-N
2	GASKET	RUBBER	1	RUBBER	RU-0008
3	WASHER	BRASS	1	NICKEL	W-0012-N
4	INSULATION	TEFLON	1	TEFLON	I-0138T
5	BODY 1	BRASS	1	NICKEL	B-SMA0154-N
6	BODY 2	BRASS	1	NICKEL	B-TNC0423-N
7	PIN	BRASS	1	GOLD	P-SMA0257-G
8	INSULATION	TEFLON	1	TEFLON	I-0189T
9	WASHER	BRASS	1	NICKEL	W-0007-N

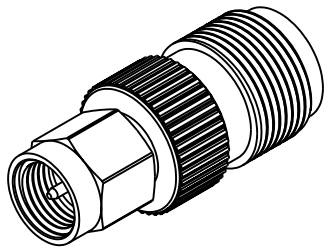

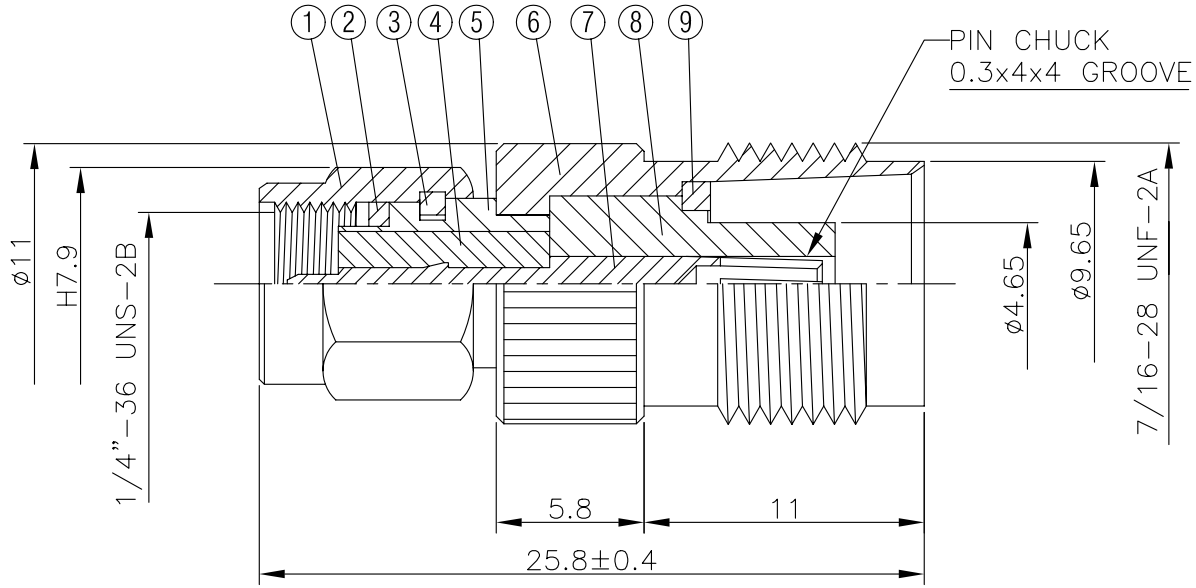

HUS-TSAN GROUP CO., LTD. P.O.BOX 40-76 TAINAN TAIWAN,R.O.C.	DRAWN	MARY	DATE	96.03.28	DIMENISIONS ARE IN MILLMETERS UNLESS OFHERWISE SPECIFIED TOLERANCE 0.5-5=±0.2 120-315=±1 5-30=±0.4 315-1000=±1.6 30-120=±0.6 1000-2000=±2.4
TITLE: SMA MALE -TNC FEMALE ADAPTOR	CHECKED	黃巧君	DATE		
PART NO.: SMA-22-TGN	Q.A.	蘇姿潔	DATE		
DRAWING NO.: SMA 22 TGN	APPROVAL	徐燦霖	DATE		SCALE 4:1 SIZE A
	REVISION		DATE		

REVISION	
DESCRIPTION	ENGINEER