NO	DESCRIPTION	MATERIAL	Q'TY	FINISH	REMARK
1	NUT	BRASS	1	NICKEL	N-0004-N
2	BODY 1	BRASS	1	NICKEL	B-N1270-N
3	INSULATION	TEFLON	1	TEFLON	I-0448T
4	INSULATION	TEFLON	1	TEFLON	I-0117T
5	BODY 2	BRASS	1	NICKEL	B-N0320-N
6	PIN	BRASS	1	GOLD	P-N0837-G
7	BODY 3	BRASS	1	NICKEL	B-BNC0561-N
8	WASHER	BRASS	1	NICKEL	W-0005-N
9	NUT	BRASS	1	NICKEL	N-0007-N

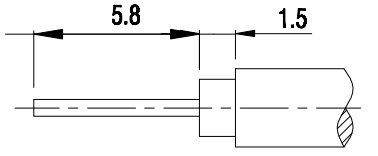

(Recommended Stripping Dimension)

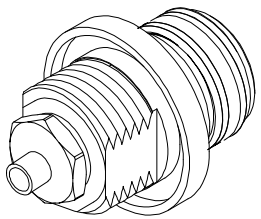

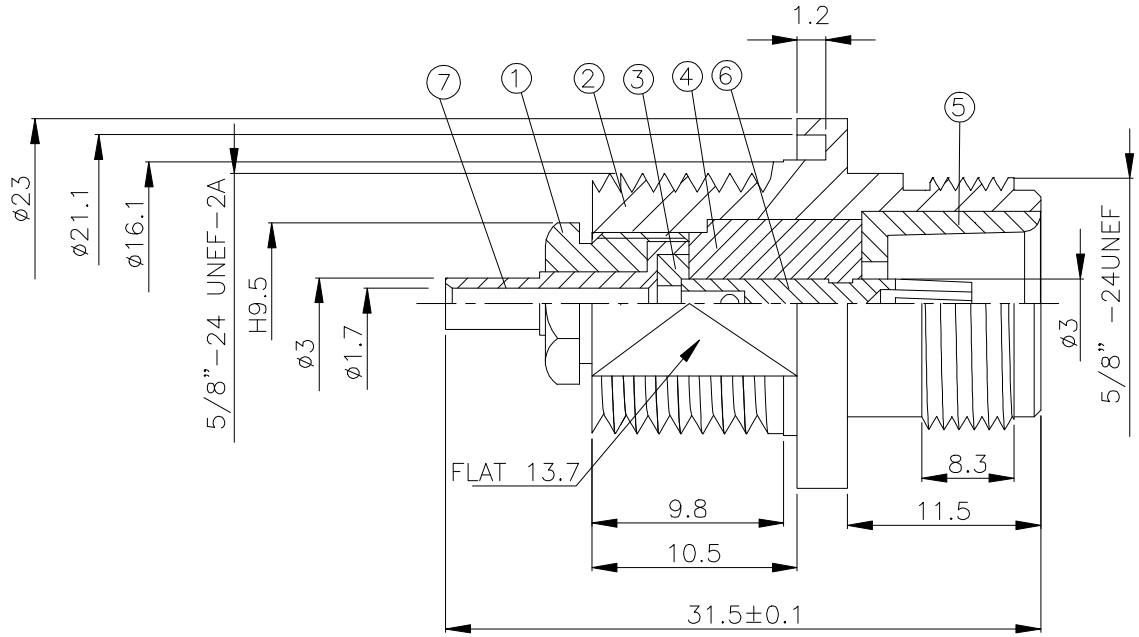

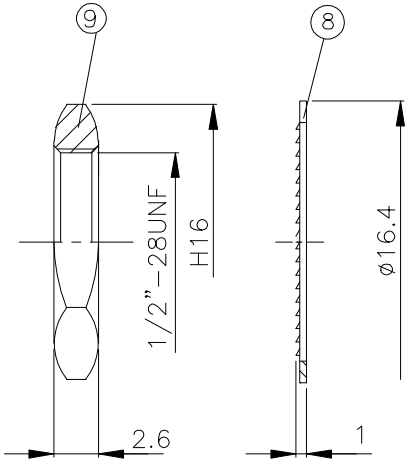

HUS-TSAN GROUP CO. ,LTD P.O. BOX 40-76.TAINAN TAIWAN,R.O.C.	DRAWN MARY	DATE 96.05.02	DIMENSIONS ARE IN MILLMETERS	REVISION
TITLE N BULKHADE FEMALE SOLDER FOR RG-405/U(01649)	CHECKED 蘇姿瀾	DATE	UNLESS OTHERWISE SPECIFIED TOLERANCES	DESCRIPTION / ENGINEER
	Q.A. 馮健華	DATE	0.5-5=±0.2 120-315=±1	
PART NO. N-45V1-TGN-1	APPROVAL 徐燦霖	DATE	5-30=±0.4 315-1000=±1.6	
DRAWING NO. N-45V1-TGN-1	REVISION	DATE	30-120=±0.6 1000-2000=±2.4	
			SCALE 4:1 SIZE A	